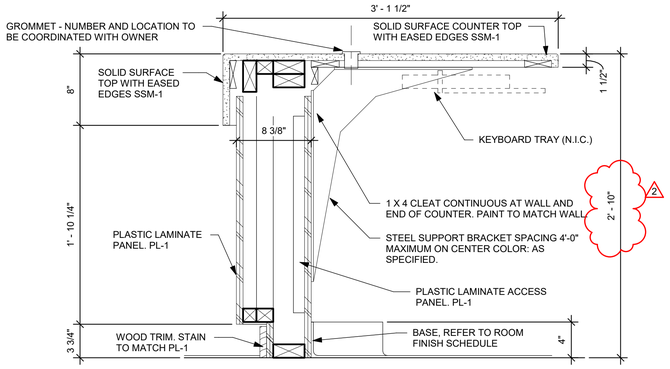

B1 RECEPTION DESK DETAIL @ PHARMACY
1 1/2" = 1'-0"

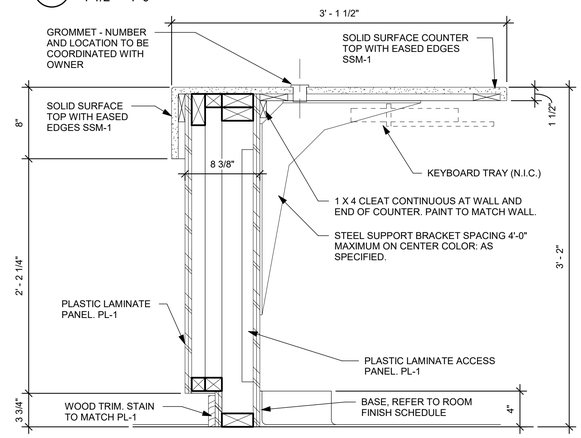

D1 RECEPTION DESK DETAIL @ PHARMACY
1 1/2" = 1'-0"

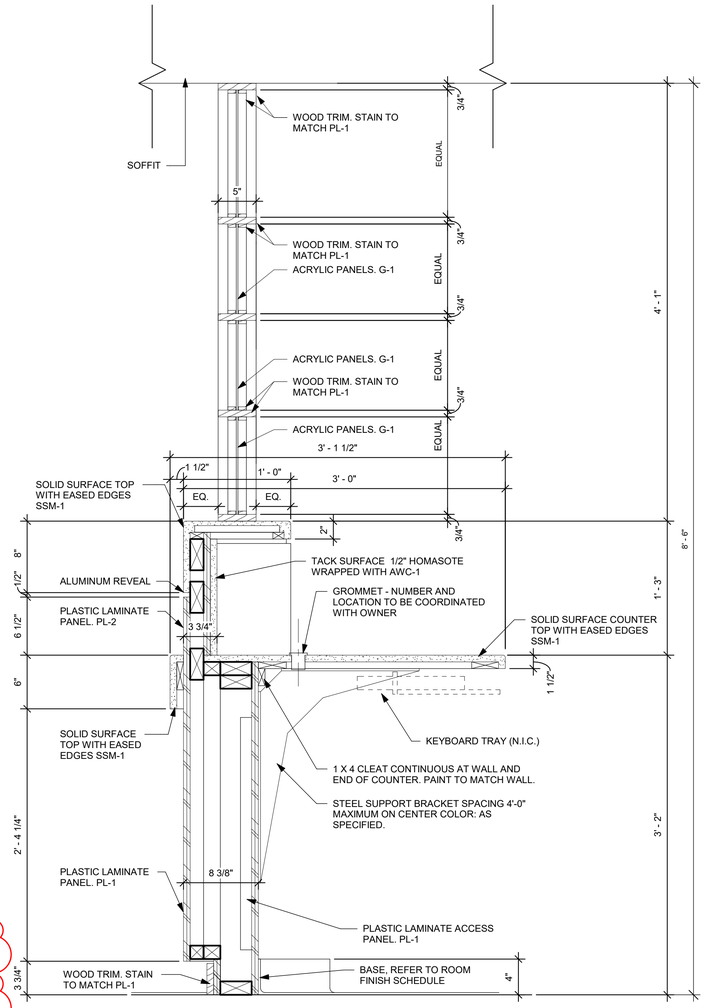

E3 RECEPTION DESK DETAIL @ PHARMACY
1 1/2" = 1'-0"

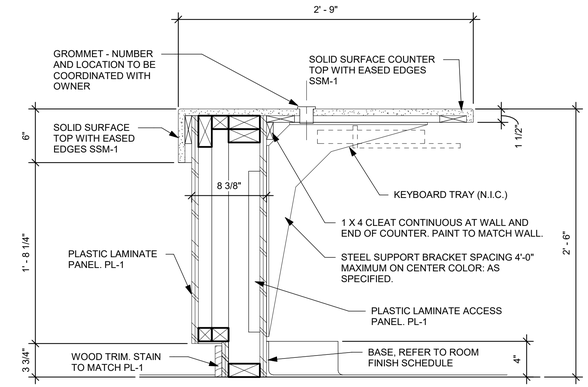

B6 RECEPTION DESK DETAIL
1 1/2" = 1'-0"

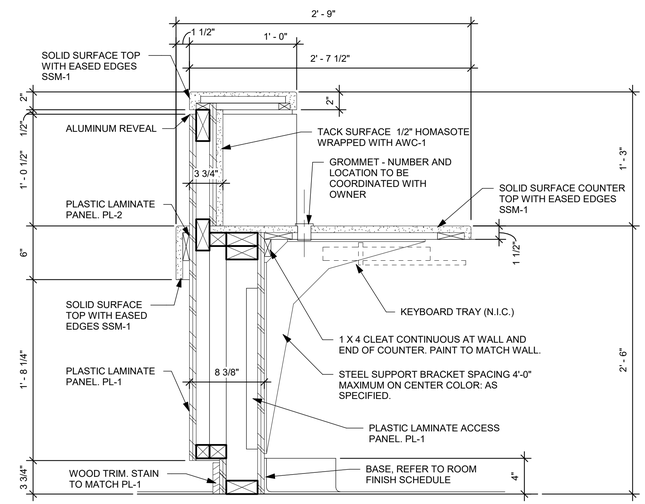

E5 RECEPTION DESK DETAIL
1 1/2" = 1'-0"

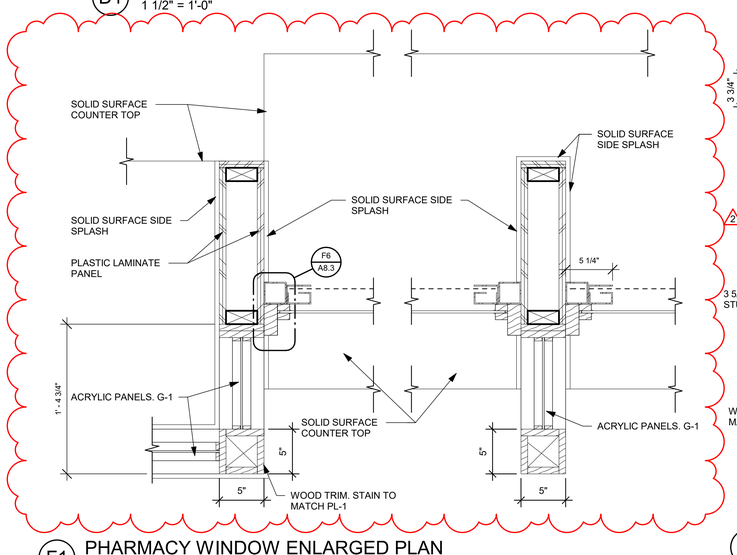

F1 PHARMACY WINDOW ENLARGED PLAN
1 1/2" = 1'-0"

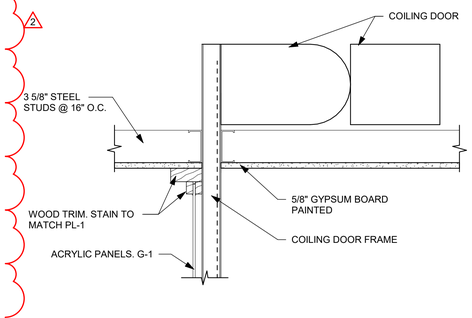

F3 PHARMACY WINDOW SECTION
1 1/2" = 1'-0"

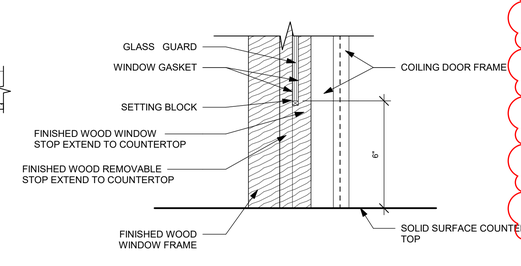

F5 PHARMACY WINDOW ELEVATION
3" = 1'-0"

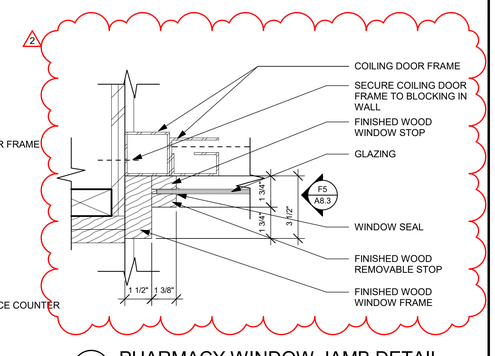

F6 PHARMACY WINDOW JAMB DETAIL
3" = 1'-0"

App Architecture
creative focused design
615 Woodside Drive, Englewood, Ohio 45322
T 937.836.8898 F 937.832.3696
www.app-arch.com

STATE OF OHIO
TODD A. GINDELBERGER
12147
REGISTERED ARCHITECT
Todd A. Gindelberger, License #12147
Expiration Date 12/31/2023

FACILITY RENOVATION
FAMILY HEALTH SERVICES OF DARKE COUNTY
5735 MEEKER ROAD, GREENVILLE, OH 45331

ISSUE

NO.	DATE	DESCRIPTION
	07/19/23	ISSUE FOR PERMIT & CONSTRUCTION
2	08/09/23	ADDENDUM 3

DATE	07/19/23
JOB NO.	3853.03
DRAWN	LJY
CHECKED	MLW

COPYRIGHT © 2023 - App Architecture, Inc.

TITLE
CASEWORK DETAILS

SHEET NO.
A8.3

8/10/2023 2:27:49 PM